Solvent

Brand Equivalency

Gopani™

www.gopani.com

Universal Slip on 1/8

Equivalent To:

Waters Corporation

Fits Models:

510, 515, 600, 610, 1515, 1525, 1525 Micro, 1525EF, 2535, 2545, 2555, 2690, 2690D, 2695, 2695D, 2700, ACQUITY UPLC® BSM Compatibility

Specifications

Gopani Part #: **CSPWSFHS16LS6SO4**

1.0 Description

These solvent bottle filters are designed to be compatible with **WATERS** 510, 515, 600, 610, 1515, 1525, 1525
Micro, 1525EF, 2535, 2545, 2555, 2690, 2690D, 2695, 2695D, 2700, ACQUITY UPLC® BSM systems. They
are comparable to **Waters** part number 700003616.The Solvent Filter is a critical clean part made of SS material.

2.0 Wetted Materials Specifications :

SS 316L

3.0 Installation Information

Gopani parts are designed to be compatible and interchangeable with OEM parts. Please see the instrument service manual for proper removal and installation procedure.
Please note: A short piece of 1/8” ID tubing, Mobile Phase Transfer Line, TFE, 3/16” OD x, 1/8” ID x 25, is needed to attach the solvent filter to standard 1/8” OD solvent tubing.

4.0 Warranty

We view your business with us as a partnership based on mutual trust. We extend a Lifetime Warranty against any manufacturing defects on all Gopani HPLC repair parts. If a defect is identified, please contact us at 98246 01857 or by email at sales@Gopani.com to report the issue. We will assist you with a resolution in no time.

Please note: A short piece of 1/8” ID Tubing, FEP 3/16” OD x 1/8” ID x 10ft is needed to attach the solvent filter to standard 1/8” OD solvent tubing.

**All of the above fit models and system description are of Waters Corporation.*

Push Fit PTFE Solvent Filter

Equivalent To:

Shimadzu Corporation

Fits Models:

LC-20AD/AB, LC-10ADvp, LC-10AT, LC- 10ATvp, LC-20ADXR, LC-20AR, LC-20AT and LC-30AD HPLC Pumps Compatibility

Specifications

Gopani Part #: **CSPWSFHS16LPTFETU5**

1.0 Description

This suction filter is designed to be compatible with **SHIMADZU** LC-10ADvp, LC-10AT, LC-10ATvp, LC-20AD/AB, LC-20ADXR, LC-20AR, LC-20AT and LC-30AD HPLC pumps. It is comparable to **Shimadzu** part number 228-45707-91.

2.0 Wetted Materials Specifications :

SS 316L, PTFE

3.0 Installation Information

Gopani parts are designed to be compatible and interchangeable with OEM parts. Please see instrument service manual for proper removal and installation procedure.

4.0 Warranty

We view your business with us as a partnership based on mutual trust. We extend a Lifetime Warranty against any manufacturing defects on all Gopani HPLC repair parts. If a defect is identified, please contact us at **98246 01857 or by email at sales@gopani.com** to report the issue. We will assist you with a resolution in a timely fashion.

**All of the above fit models and system description are of Shimadzu Corporation.*

Last Drop Solvent Filter

Equivalent To:

Agilent Technologies

Fits Models:

compatible with Agilent 1050, 1090, 1100 and 1200 HPLC systems

Specifications

Gopani Part #: **LDP**

1.0 Description

This solvent filter is designed to be compatible with **AGILENT** 1050, 1090, 1100 and 1200 HPLC systems. It is comparable to **Agilent** part number 01018-60025.

2.0 Wetted Materials Specifications :

SS 316L

3.0 Installation Information

Gopani parts are designed to be compatible and interchangeable with OEM parts. Please see instrument service manual for proper removal and installation procedure.

4.0 Warranty

We view your business with us as a partnership based on mutual trust. We extend a Lifetime Warranty against any manufacturing defects on all Gopani HPLC repair parts. If a defect is identified, please contact us at **98246 01857** or by email at **sales@gopani.com** to report the issue. We will assist you with a resolution in a timely fashion.

**All of the above fit models and system description are of Agilent Technologies.*

3 Step Tube Fit Solvent Filter

Ideal for helium sparging three porosities Fitting and pipe connectors

Equivalent To: VICI AG

Mobile phase filters protect your HPLC system from small particles in the mobile phase. These filters are made from 316 stainless with PEEK or Metal connectors for optimal sensing and are suitable for use with most solvents. The complete line has versions for both analytical and preparative applications.

3 Step helium spargers (10 µm versions) offer an inexpensive way to prepare and maintain mobile phases free of dissolved gases. Helium sparging will remove dissolved atmospheric gases from the mobile phase.

Fitting type	Tubing/pipe size		Pore size	Maximum flow rate*
1/4-28 fitting	1/16"		2 µm	35 ml/min
			10 µm	35 ml/min
			20 µm	35 ml/min
	1/8"		2 µm	35 ml/min
			10 µm	100 ml/min
			20 µm	120 ml/min
Stepped **New!**	1/16", 3/32", and 3.76 mm tube ID	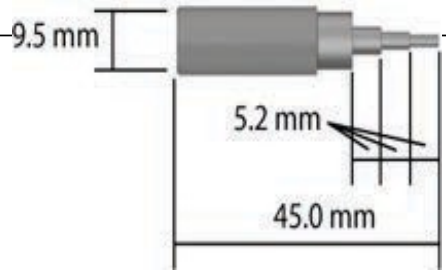	2 µm	
			10 µm	
			20 µm	
Pipe	1/8"	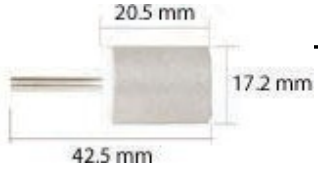	2 µm	95 ml/min
		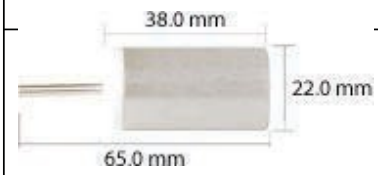	2 µm	50 ml/min
			25 µm	100 ml/min

* Flow-rate measured with methanol/water (1:1), ultrasonic degassed, helium sparging to prevent regassing.

**All of the above fit models and system description are of VICI AG.*

Product Guide

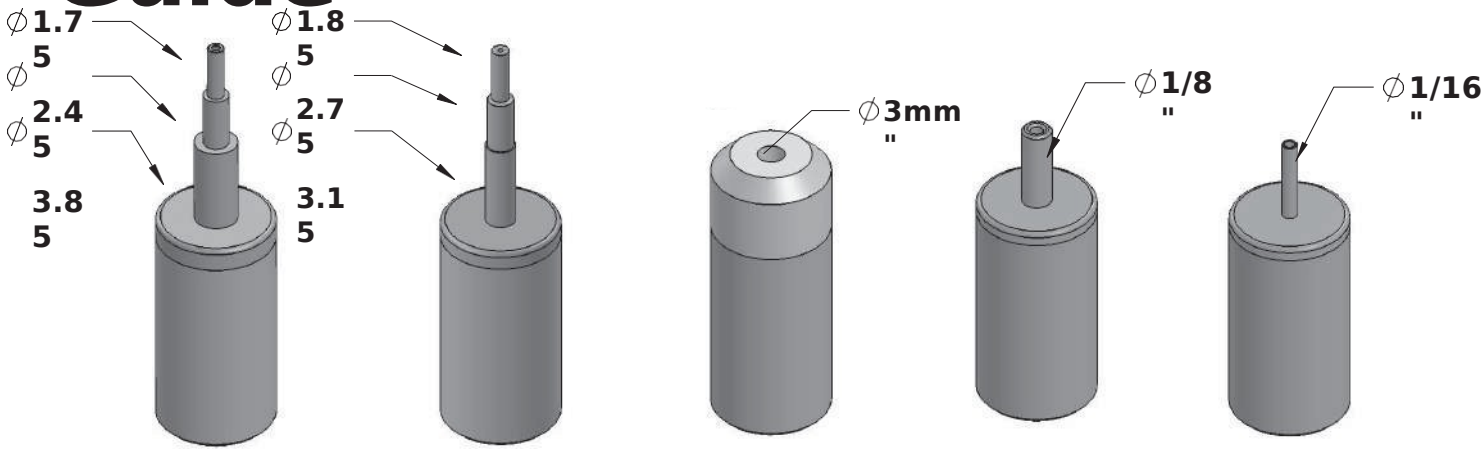

Tripod-1 | **Tripod-1** | **3mm OD Tube Connector** | **1/8" Connector Slipon** | **1/16" Connector Slipon**

Solvent Filter

CSPVSF Cartridge Part Number
P-SF Generation

CS

Micron
C = 0.5 µm
E = 2 µm
G = 5 µm
H = 10 µm
I = 20 µm

Size
S1 = 126425

MOC Filter
6L = SS316L
HC = Hastelloy C

MOC Hardware
SS = SS316
PTFE = PTFE
X = None

Connector Type
TP = Tripod
SO = Slipon
TU = Tube Connector
X = None

Tube Size
1 = dia 1.75, dia 2.45, dia 3.85
2 = dia 1.85, dia 2.75, dia 3.15
3 = 1/16"
4 = 1/8"
5 = 3mm
X = None

Gopani™

For more information, write to us at info@gopani.com

Gopani™

Gopani Product Systems :104 Kashi Parekh Complex, Swastik Cross Road, B/h Bhagwati Chambers, C. G. Road, Navrangpura, Ahmedabad Gujarat-380009, INDIA . Email: info@gopani.com Phone: +91-79-26441972/1951 Website: www.gopani.com